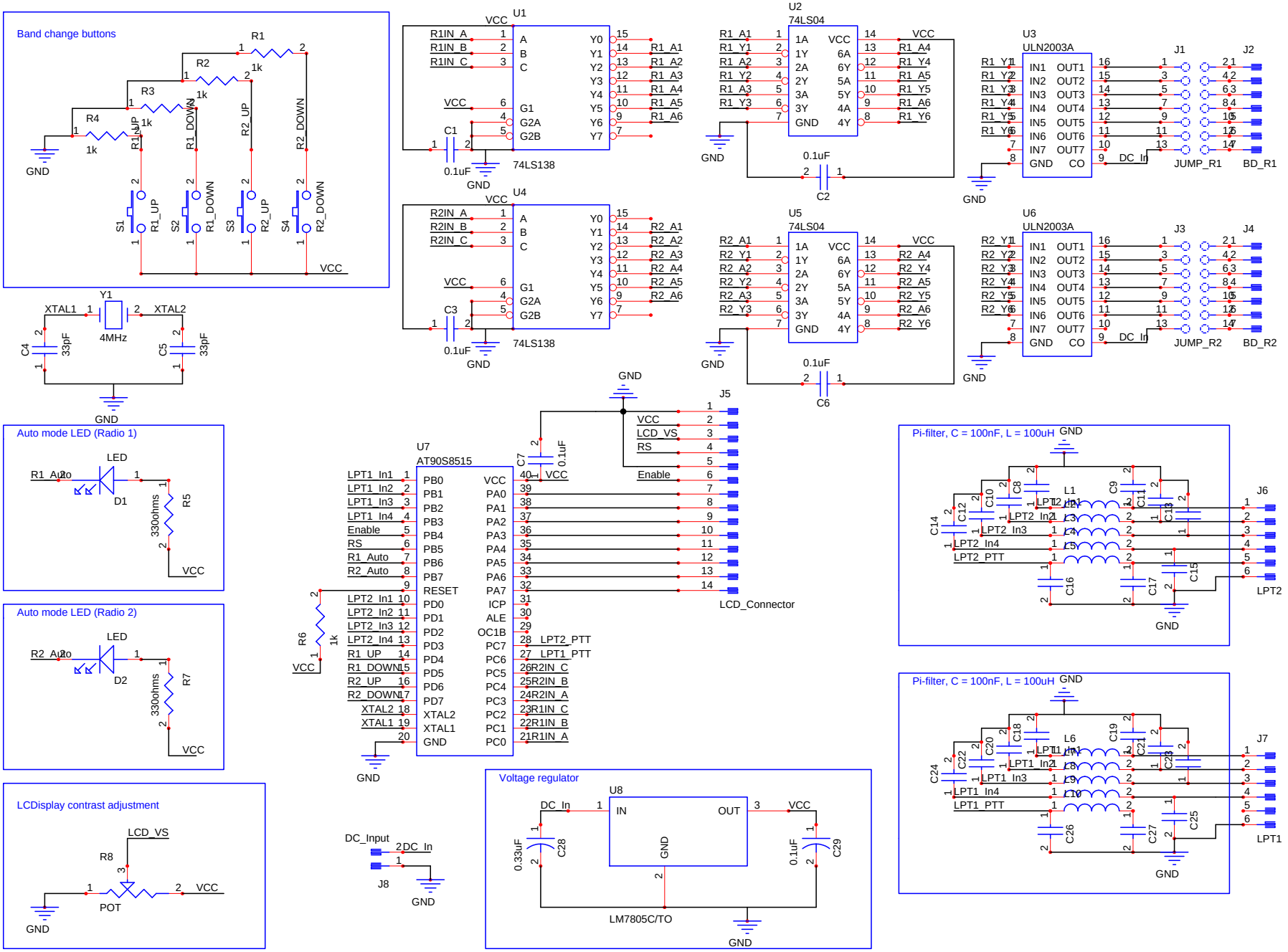
Band change buttons
R1
R2
R3
R4
1k
R1_UP
R1_DOWN
R2_UP
R2_DOWN
S1
S2
S3
S4
GND
VCC
U1
74LS138
R1IN_A
R1IN_B
R1IN_C
R1_A1
R1_A2
R1_A3
R1_A4
R1_A5
R1_A6
C1
0.1uF
U2
74LS04
R1_A1
R1_Y1
R1_A2
R1_Y2
R1_A3
R1_Y3
R1_A4
R1_Y4
R1_A5
R1_Y5
R1_A6
R1_Y6
C2
U3
ULN2003A
J1
J2
JUMP_R1
BD_R1
DC_In
U4
74LS138
R2IN_A
R2IN_B
R2IN_C
R2_A1
R2_A2
R2_A3
R2_A4
R2_A5
R2_A6
C3
U5
74LS04
R2_A1
R2_Y1
R2_A2
R2_Y2
R2_A3
R2_Y3
R2_A4
R2_Y4
R2_A5
R2_Y5
R2_A6
R2_Y6
C6
U6
ULN2003A
J3
J4
JUMP_R2
BD_R2
Y1
4MHz
XTAL1
XTAL2
C4
C5
33pF
Auto mode LED (Radio 1)
LED
D1
R1_Auto
R5
330ohms
Auto mode LED (Radio 2)
D2
R2_Auto
R7
U7
AT90S8515
LPT1_In1
LPT1_In2
LPT1_In3
LPT1_In4
Enable
RS
R1_Auto
R2_Auto
LPT2_In1
LPT2_In2
LPT2_In3
LPT2_In4
R1_UP
R1_DOWN
R2_UP
R2_DOWN
XTAL2
XTAL1
PB0
PB1
PB2
PB3
PB4
PB5
PB6
PB7
RESET
PD0
PD1
PD2
PD3
PD4
PD5
PD6
PD7
XTAL2
XTAL1
GND
VCC
PA0
PA1
PA2
PA3
PA4
PA5
PA6
PA7
ICP
ALE
OC1B
PC7
PC6
PC5
PC4
PC3
PC2
PC1
PC0
LPT2_PTT
LPT1_PTT
R2IN_C
R2IN_B
R2IN_A
R1IN_C
R1IN_B
R1IN_A
R6
C7
0.1uF
J5
LCD_Connector
LCD_VS
RS
Enable
Pi-filter, C = 100nF, L = 100uH
L1
L2
L3
L4
L5
L6
L7
L8
L9
L10
C8
C9
C10
C11
C12
C13
C14
C15
C16
C17
J6
LPT2
C18
C19
C20
C21
C22
C23
C24
C25
C26
C27
J7
LPT1
LCDisplay contrast adjustment
LCD_VS
R8
POT
Voltage regulator
U8
IN
OUT
DC_In
C28
0.33uF
C29
0.1uF
LM7805C/TO
DC_Input
J8